GRUA AUTOMONTABLE
SELF-ERECTING CRANE
GRUE À MONTAGE RAPIDE

MiDi LT14 RD-XP

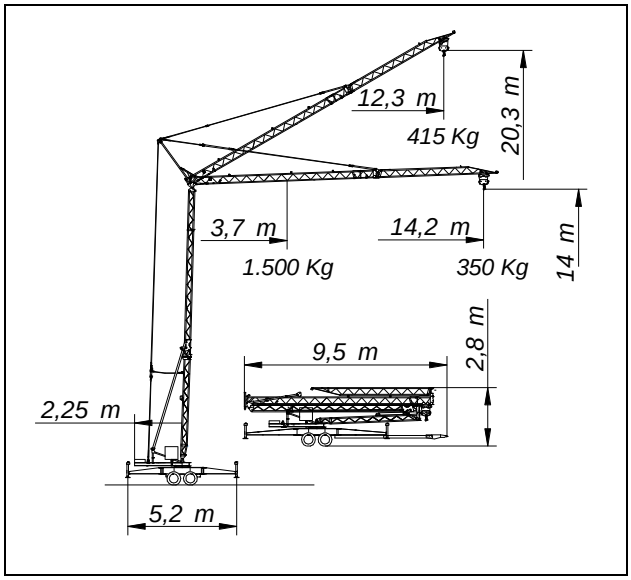

ENGINES	
Hoisting	4.00 hp three-phase
Slewing	0.75 hp three-phase
Trolley	0.75 hp three-phase
Hydraulic	1.00 hp single-phase

SAFETY DEVICES
Maximum load limiter
Inertia moment limiter
Trolley path limiter
Hook path limiter
Slewing path limiter
2nd elevation speed limiter
3rd elevation speed limiter
2nd trolley speed limiter
Trolley fall protection (when folded JiB)
Encoder (PLC configuration only)

MAIN FEATURES	
Single-phase Voltage	230 V
Power required	4500 w
Crane Weight (w/o ballast)	2890 Kg
Ballast	600 Kg
Distance between support bases	5.20 m
Base radius (including ballast)	2.25 m
Hydraulic assembly of JiB & Column	
Variable-frequency drive: 3 (Slewing – Hoisting – Trolley)	
Hoisting Gears: 3 (7 mpm – 12 mpm – 20 mpm)	
Slewing Gears: 2 (0.3 rpm – 0.8 rpm)	
Trolley Gears: 2 (8 mpm – 20 mpm)	
Trolley Configuration: RD-XP Road Express: Approved B+E. Assembly & Work ballasts integrated	
Hydraulic assembly of JiB & Column	
Optional: PLC Automation configuration tool with touch screen.	

TECHNICAL FEATURES	Horizontal JiB	30° JiB
Height under JiB / Hook	14.70 m / 14.00 m	21.00 m / 20.30 m
JiB Radius	14.2 m	12.30 m
Maximum load at JiB	350 Kg	425 Kg
Radius with maximum load	3.70 m	8.00 m
Maximum load	1500 Kg	650 Kg

LOAD CURVES

LT14 RD-XP

HORIZONTAL JiB	m	→ 3,7	5,0	6,0	7,0	8,0	9,0	10,0	11,0	12,0	13,0	14,0
	kg	1500	1150	875	750	650	590	525	485	420	395	350
30° JiB	m	→ 8,0	9,0	10,0	11,0	12,0						
	kg	650	600	535	490	425						
½ JiB	m	→ 4,0	5,0	6,0	7,0	8,5						
	kg	1500	1220	930	824	660						

TRANSPORT	CRANES
40’ CONTAINER HC	1
TAULINER MEGA TRAILER	1

EURO CRANE S.A.
Polígono Industrial “La Noria” - Carretera de Castellón Km. 221
50730 El Burgo de Ebro (Zaragoza) – SPAIN
Tel: +34 976 104 209 - www.midicranes.com

MiDi CRANES lifting easy